Mercury T02-P1 Harness

File Name: M02-P1 Harness
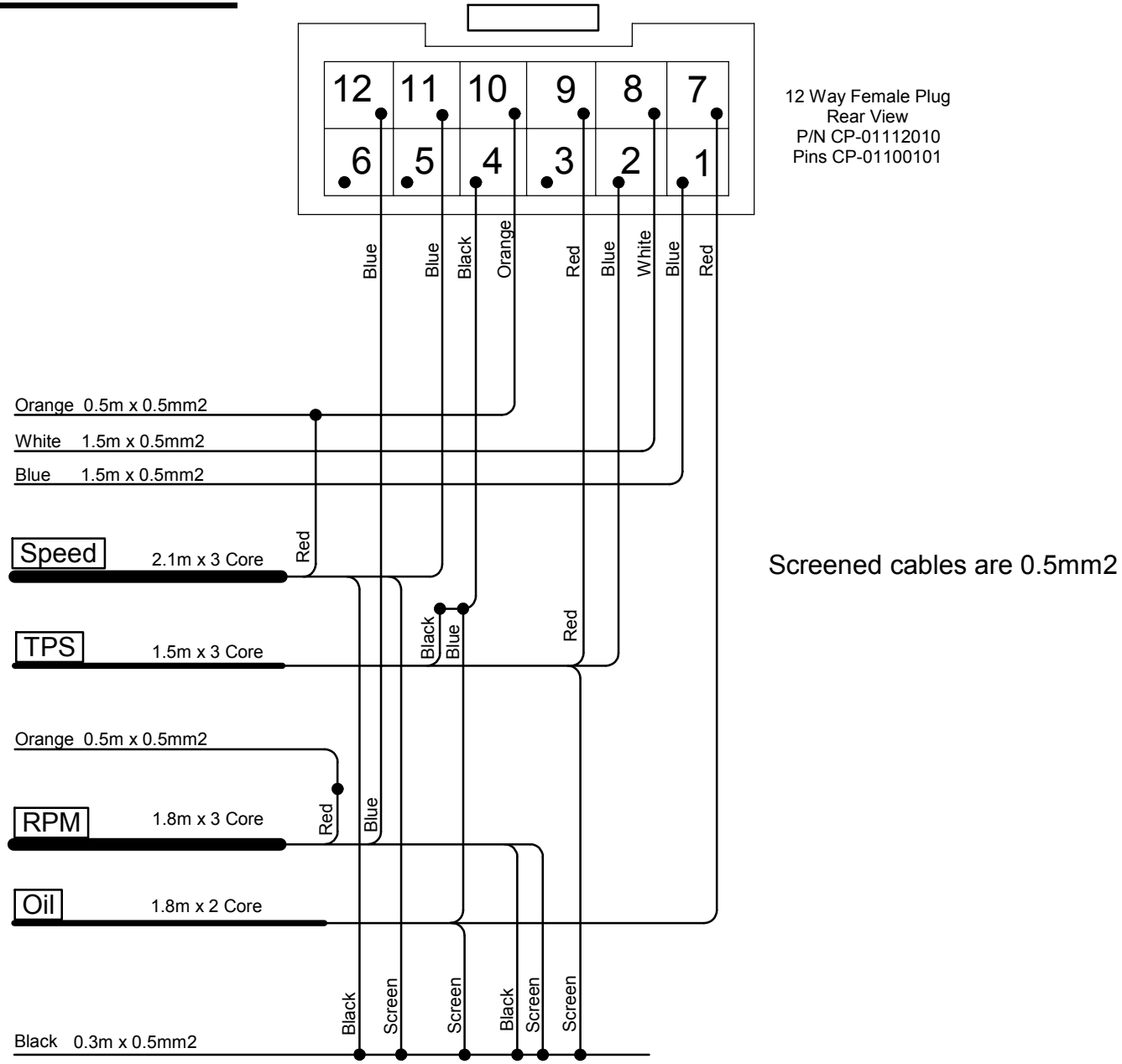
Last Changed: 13/06/2014