Mercury T01-P1 Harness

File Name: M01-P1 Harness
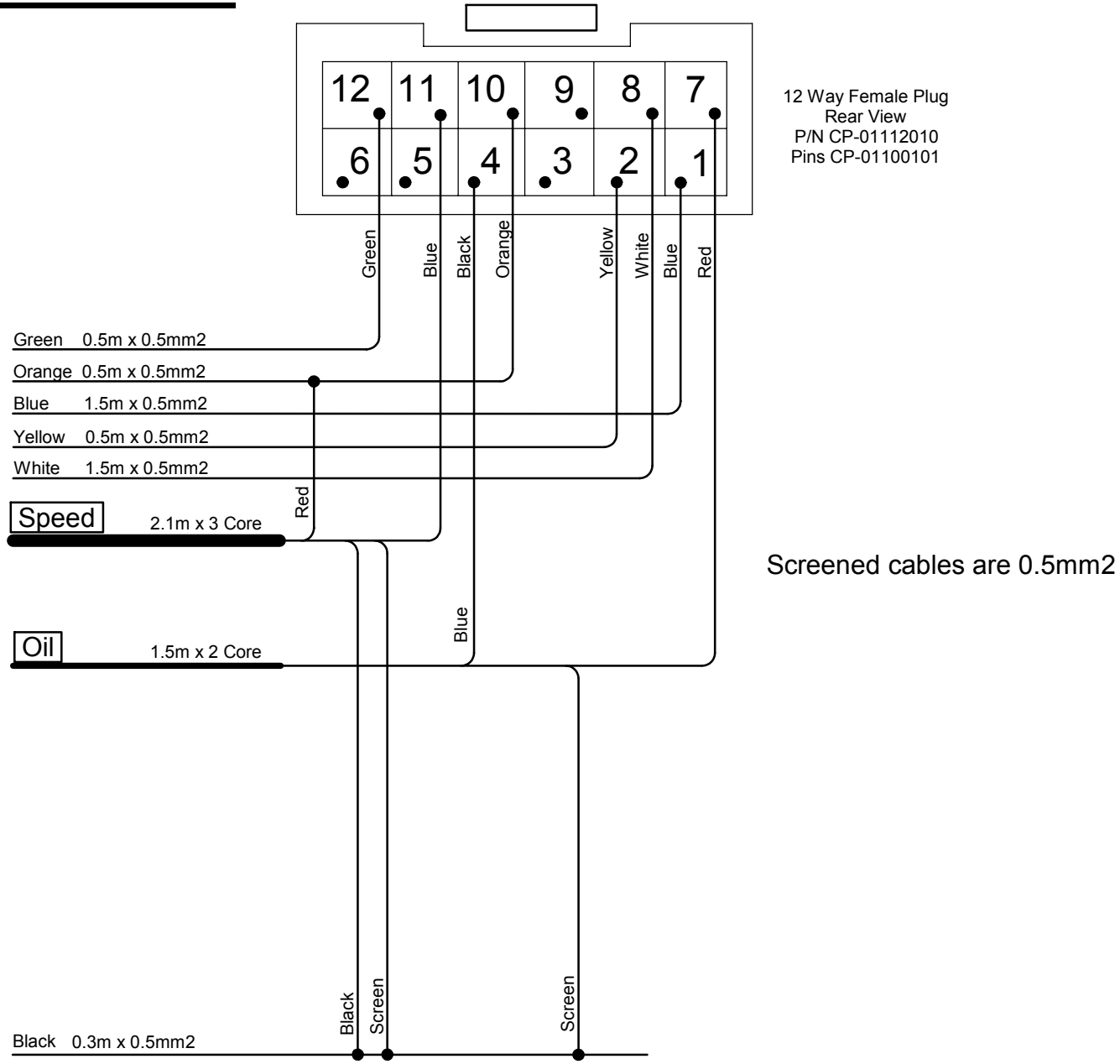
Last Changed: 13/06/2014