Z03 Input Harness

File Name: Z03 Harness

Last Changed: 05/08/2016

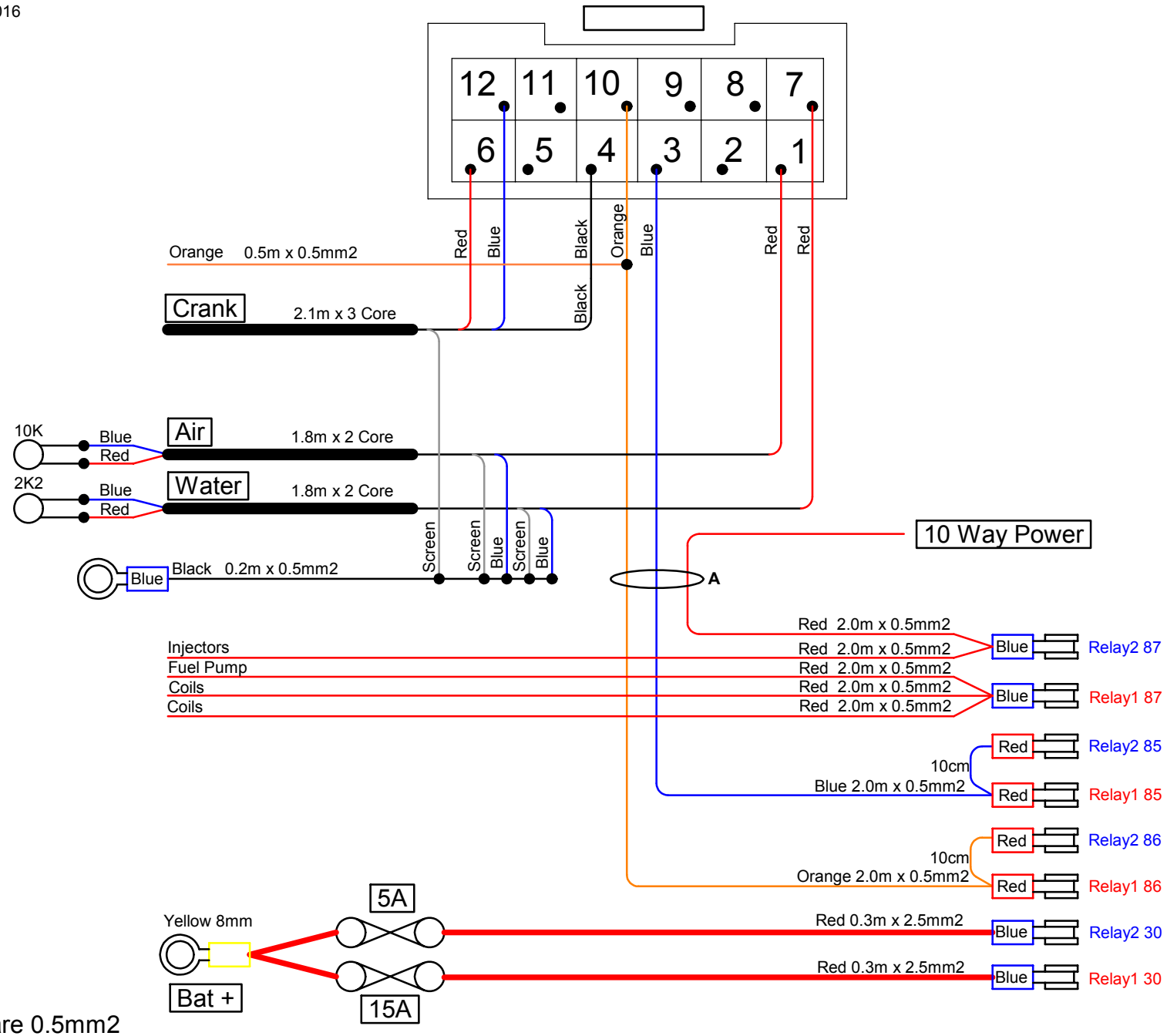

Screened cables are 0.5mm2