J02 Output Harness

File Name: J02 Harness
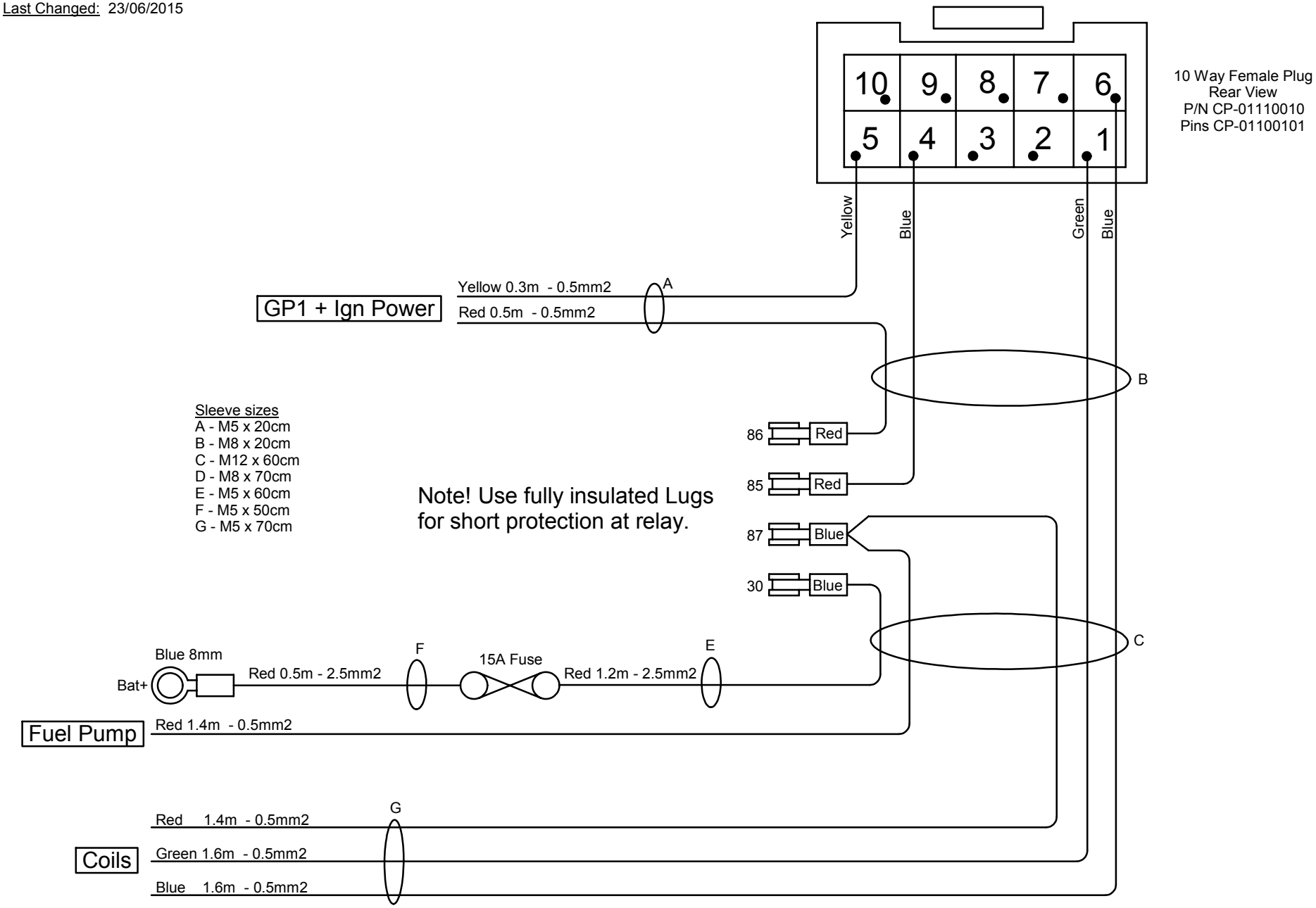
Last Changed: 23/06/2015