12Cyl W/S COP No Drv

Last Changed: 22/10/2025
Harness Required: M62-P2 + (2x) MC6-P2

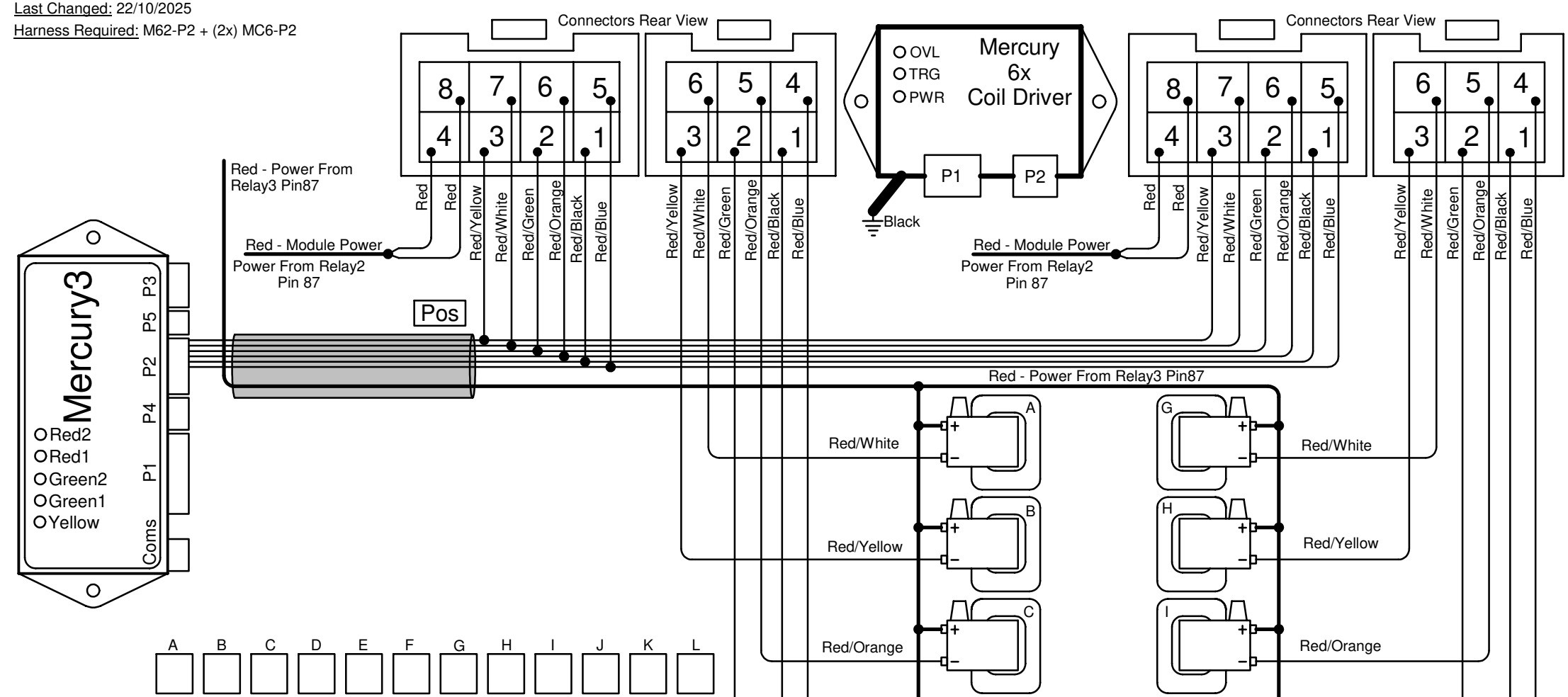

A	B	C	D	E	F	G	H	I	J	K	L

Write your firing order from left to right in the blocks above marked with an alphabetical letter. Then write the corresponding number on the corresponding coil with the same alphabetical letter in the drawing below. Now connect your coil number to the corresponding colour wire.
Note: The order of the coils will differ on their placing on the engine, as long as it is connected to the same colour wire as this illustration. You may swop drivers on the modules around to simplify wiring to the coils.

P2

6	7	8	9	10
1	2	3	4	5

Harness Pin View

1. Red/White - Coil Drv 1
2. Red/Orange - Coil Drv 3
3. Red/Blue - Coil Drv 5
4. Blue/Red -
5. Red -
6. Red/Yellow - Coil Drv 2
7. Red/Green - Coil Drv 4
8. Red/Black - Coil Drv 6
9.
10. Red -

Connector Pinouts

Software Settings

Coil Combination

Wasted Spark Coil Pack